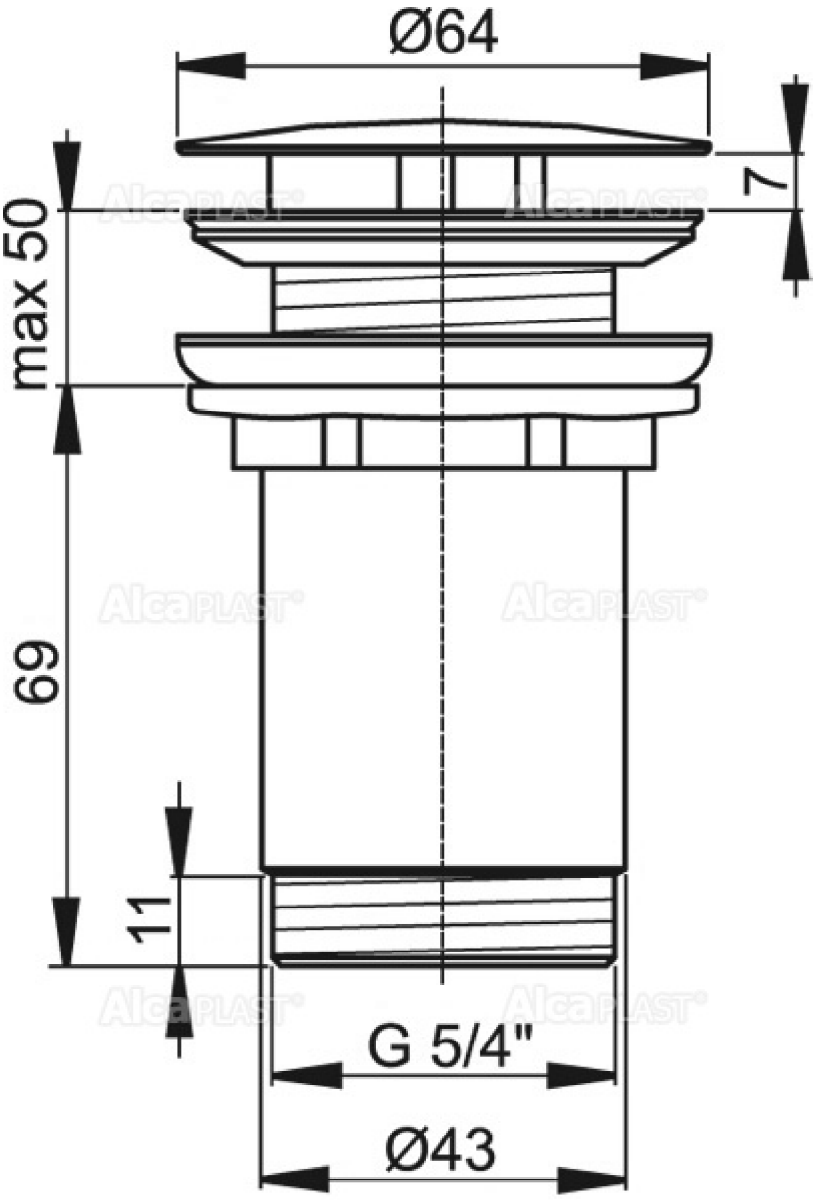
Ø64
7
max 50
69
11
G 5/4"
Ø43